Type B Loaded Lip Seals - Inch, cont'd.

Part Number	Rod Diameter d	Groove Diameter D	Seal Height L_1	Groove Height L
1/2" CROSS SECTION ("F")				
50016500-750B	16.500	17.500	0.750	0.825
50017000-750B	17.000	18.000	0.750	0.825
50018000-750B	18.000	19.000	0.750	0.825
50020000-750B	20.000	21.000	0.750	0.825
50021000-750B	21.000	22.000	0.750	0.825
50029000-750B	29.000	30.000	0.750	0.825
50034500-750B	34.500	35.500	0.750	0.825
5/8" CROSS SECTION ("F")				
62505000-1000B	5.000	6.250	1.000	1.100
62505250-1000B	5.250	6.500	1.000	1.100
62506000-1000B	6.000	7.250	1.000	1.100
62507250-1000B	7.250	8.500	1.000	1.100
62508500-1000B	8.500	9.750	1.000	1.100
62509000-1000B	9.000	10.250	1.000	1.100

Part Number	Rod Diameter d	Groove Diameter D	Seal Height L_1	Groove Height L
5/8" CROSS SECTION ("F")				
62509750-1000B	9.750	11.000	1.000	1.100
62511500-1000B	11.500	12.750	1.000	1.100
62518750-1000B	18.750	20.000	1.000	1.100
62519750-1000B	19.750	21.000	1.000	1.100
3/4" CROSS SECTION ("F")				
75008000-1250B	8.000	9.500	1.250	1.375
75008500-1125B	8.500	10.000	1.125	1.238
75009000-1250B	9.000	10.500	1.250	1.375
75010500-1000B	10.500	12.000	1.000	1.100
75012000-1250B	12.000	13.500	1.250	1.375
75014000-1250B	14.000	15.500	1.250	1.375
75020500-1000B	20.500	22.000	1.000	1.100
1" CROSS SECTION ("F")				
100016000-1250B	16.000	18.000	1.250	1.375

PIP Rings - Inch

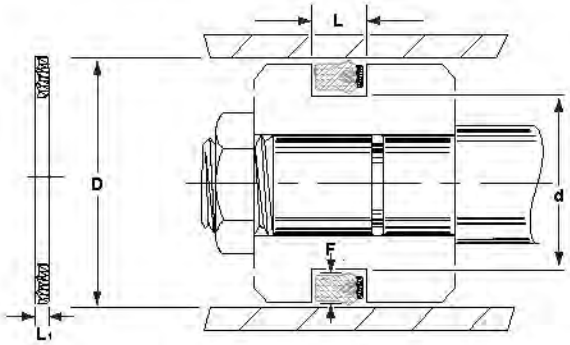

EXAMPLE: 25002750PR		
Cross Section	Inside Diameter	Suffix
250	02750	PR
1/4	2-3/4"	PIP Rings

"PIP" (Pressure Inverting Pedestal) rings convert type "B" loaded lip seals into bi-directional seals. Pip rings are made from a harder durometer urethane material and may be split for easier installation or cut down for in-between sizes.

Temperature: -60°F to 200°F Pressure: 0 to 5,000 PSI

Part Number	Groove Diameter d	Bore Diameter D	Seal Height L_1
1/8" CROSS SECTION ("F")			
12500437PR	0.437	0.687	0.062
12500750PR	0.750	1.000	0.062
12501250PR	1.250	1.500	0.062
12501500PR	1.500	1.750	0.062
12501750PR	1.750	2.000	0.062

Part Number	Groove Diameter d	Bore Diameter D	Seal Height L_1
3/16" CROSS SECTION ("F")			
18700750PR	0.750	1.125	0.125
18700875PR	0.875	1.250	0.125
18701000PR	1.000	1.375	0.125
18701125PR	1.125	1.500	0.125
18701250PR	1.250	1.625	0.125
18701500PR	1.500	1.875	0.125
18701625PR	1.625	2.000	0.125
18701750PR	1.750	2.125	0.125
18702125PR	2.125	2.500	0.125
18702500PR	2.500	2.875	0.125
18702625PR	2.625	3.000	0.125
18703000PR	3.000	3.375	0.125
18703125PR	3.125	3.500	0.125
18703625PR	3.625	4.000	0.125